Work Order ID 60865

Monday, July 26, 2010 11:43:05 AM

Item ID: D3535-35 **Accept** **Setup Start**

Revision ID: **Stop**

Item Name: Wearshoe

Start Date: 7/26/2010 **Start Qty:** 10.00 **Cust Item ID:**

Required Date: 8/3/2010 **Req'd Qty:** 10.00 **Customer:**

Reference:

Approvals: **Process Plan:** M **Date:** 10-7-27 **Tooling:** _____ **Date:** _____ **Run Start**

QC: _____ **Date:** _____ **SPC (Y/N):** _____ **Date:** _____ **Stop**

Sequence ID/ Work Center ID	Operation Description	Set Up/ Run Hours	Tool ID	Tool #	Plan Code	Accept Qty	Reject Qty	Reject Number	Insp. Stamp
Draw Nbr	**Revision Nbr**								
D3535	Rev B								
100	FLOW WATER JET	0.00							
Waterjet	**Memo**	0.00							
FLOW CNC Waterjet	1-Cut as per Dwg D3535 ☐Dwg Rev: B ☐Prog Rev: B ☐2-								
304 .046	Deburr if necessary								
110	QC2- Inspect parts off machine FAI/FAIB	0.00							
QC	**Memo**	0.00							
Quality Control									
120	QC8- Inspect parts - second check	0.00							
QC	**Memo**	0.00							
Quality Control									

HB 10-8-19 (13)

HB 10-8-19

8/10/08/19 (40)

Dart Aerospace Ltd

W/O:		WORK ORDER CHANGES					
DATE	STEP	PROCEDURE CHANGE	By	Date	Qty	Approval Chief Eng / Prod Mgr	Approval QC Inspector

Part No: _____ **PAR #:** _____ **Fault Category:** _____ **NCR:** Yes No **DQA:** _____ **Date:** _____

Resolution: _____ **Disposition:** _____ **QA: N/C Closed:** _____ **Date:** _____

NCR:		WORK ORDER NON-CONFORMANCE (NCR)						
DATE	STEP	Description of NC Section A	Corrective Action Section B			Verification Section C	Approval Chief Eng	Approval QC Inspector
			Initial Chief Eng	Action Description Chief Eng	Sign & Date			

NOTE: Date & initial all entries

H:\FORMS\Quality Assurance\approved QA\NCRWO RevE

Work Order ID 60865

Monday, July 26, 2010 11:43:05 AM

Item ID: D3535-35 **Accept** **Setup Start**

Revision ID: **Stop**

Item Name: Wearshoe

Start Date: 7/26/2010 **Start Qty:** 10.00 **Cust Item ID:**

Required Date: 8/3/2010 **Req'd Qty:** 10.00 **Customer:**

Reference:

Approvals: **Process Plan:** _____ **Date:** _____ **Tooling:** _____ **Date:** _____ **Run Start**

QC: _____ **Date:** _____ **SPC (Y/N):** _____ **Date:** _____ **Stop**

Sequence ID/ Work Center ID	Operation Description	Set Up/ Run Hours	Tool ID	Tool #	Plan Code	Accept Qty	Reject Qty	Reject Number	Insp. Stamp
130	NC BRAKE	0.00							
Brake NC	**Memo**	0.00							
Brake NC	1-Deburr if necessary□2-Form on Brake as per Dwg D3535 using Jigs DT8261and DT8326.□3-Identify as D3535-35.								
140	QC5- Inspect part completeness to step on W/O	0.00							
QC	**Memo**	0.00							
Quality Control									
150	Grey Sandtex(Ref:4.3.5.6) per QSI005 4.3	0.00							
Powdercoat	**Memo**	0.00							
Powder Coating	START TIME: 3:15 □OVEN TEMPERATURE: 320 □FINISH TIME: 345								

Dart Aerospace Ltd

W/O:		WORK ORDER CHANGES					
DATE	STEP	PROCEDURE CHANGE	By	Date	Qty	Approval Chief Eng / Prod Mgr	Approval QC Inspector

Part No: _____ **PAR #:** _____ **Fault Category:** _____ **NCR:** Yes No **DQA:** _____ **Date:** _____

Resolution: _____ **Disposition:** _____ **QA: N/C Closed:** _____ **Date:** _____

NCR:		WORK ORDER NON-CONFORMANCE (NCR)						
DATE	STEP	Description of NC Section A	Corrective Action Section B			Verification Section C	Approval Chief Eng	Approval QC Inspector
			Initial Chief Eng	Action Description Chief Eng	Sign & Date			

NOTE: Date & initial all entries

H:\fFORMS\Quality Assurance\approved QA\NCRWO RevE

Work Order ID 60865

Monday, July 26, 2010 11:43:05 AM

Item ID: D3535-35
Revision ID:
Item Name: Wearshoe
Start Date: 7/26/2010 **Start Qty:** 10.00
Required Date: 8/3/2010 **Req'd Qty:** 10.00
Reference:

Accept

Setup Start
Stop

Cust Item ID:
Customer:

Run Start
Stop

Approvals: **Process Plan:** _____ **Date:** _____ **Tooling:** _____ **Date:** _____
QC: _____ **Date:** _____ **SPC (Y/N):** _____ **Date:** _____

Sequence ID/ Work Center ID	Operation Description	Set Up/ Run Hours	Tool ID	Tool #	Plan Code	Accept Qty	Reject Qty	Reject Number	Insp. Stamp
160 QC Quality Control	QC3- Inspect Part Finish	0.00	=> MI	10108127		13	ø		
	Memo	0.00							
170 Packaging Packaging	Identify as per dwg & Stock Location: FP-18	0.00	=> MI	10108127		13	ø		
	Memo	0.00							
180 QC Quality Control	QC21- Final Inspection - Work Order Release	0.00					10/08/27		
	Memo	0.00							

BS 10-8-27
13

Dart Aerospace Ltd

W/O:		WORK ORDER CHANGES					
DATE	STEP	PROCEDURE CHANGE	By	Date	Qty	Approval Chief Eng / Prod Mgr	Approval QC Inspector

Part No: _____ **PAR #:** _____ **Fault Category:** _____ **NCR:** Yes No **DQA:** _____ **Date:** _____

Resolution: _____ **Disposition:** _____ **QA: N/C Closed:** _____ **Date:** _____

NCR:		WORK ORDER NON-CONFORMANCE (NCR)						
DATE	STEP	Description of NC Section A	Corrective Action Section B			Verification Section C	Approval Chief Eng	Approval QC Inspector
			Initial Chief Eng	Action Description Chief Eng	Sign & Date			

NOTE: Date & initial all entries

H:\fFORMS\Quality Assurance\approved QA\NCRWO RevE

Picklist Print

Monday, July 26, 2010 11:43:10 AM

Work Order ID: 60865

Parent Item: D3535-35

Parent Item Name: Wearshoe

Start Date: 7/26/2010 **Required Date:** 8/3/2010

Start Qty: 10.00 **Required Qty:** 10.00

Comments: IPP Rev:A New Issue 07-02-15 JLM
IPP Rev:B As per Rev B 07-08-31 JLM Verified By:EC

Component Item ID/ Item Name	Replacement Item ID	Mfg/ Purch	Bin Item	Primary Location	Last Location	Route Seq ID	Unit of Measure	Qty on Hand	Qty per Kit	Total Qty	Qty Issued	Date Issued	Status
M304S20GA 304/316 .040 Sheet		Purchased	No			100	sf	51.8987	0.8022	8.444211	10.5 1B10-8-19		

Location		Loc Qty	Loc Code
MAT		48.4522	
	114574	48.4522	
MAT20		3.4465	
	112885	2.7475	
	113062	0.699	
	115440		115440

13

Dart Aerospace Ltd

W/O:		WORK ORDER CHANGES					
DATE	STEP	PROCEDURE CHANGE	By	Date	Qty	Approval Chief Eng / Prod Mgr	Approval QC Inspector

Part No: _____ **PAR #:** _____ **Fault Category:** _____ **NCR:** Yes No **DQA:** _____ **Date:** _____

Resolution: _____ **Disposition:** _____ **QA: N/C Closed:** _____ **Date:** _____

NCR:		WORK ORDER NON-CONFORMANCE (NCR)						
DATE	STEP	Description of NC Section A	Corrective Action Section B			Verification Section C	Approval Chief Eng	Approval QC Inspector
			Initial Chief Eng	Action Description Chief Eng	Sign & Date			

NOTE: Date & initial all entries

H:\fFORMS\Quality Assurance\approved QA\NCRWO RevE

DART AEROSPACE LTD	Work Order:	60865
Description: Wearshoe	**Part Number:**	D3535-35
Inspection Dwg: D3535 **Rev:** B		Page 1 of 1

FIRST ARTICLE INSPECTION CHECKLIST

[X] First Article [ ] Prototype

Drawing Dimension	Tolerance	Actual Dimension	Accept	Reject	Method of Inspection	Comments
2.000	+/-0.010	2.000	✓		V HB02	
1.885	+/-0.010	1.888	✓		V	
6.00	+/-0.030	6.06	✓		T HB01	
6.75	+/-0.030	6.75	✓		T	
Ø0.188	+0.005/-0.001	.192	✓		T	
23.250	+/-0.010	23.250	✓		T	
19.750	+/-0.010	19.750	✓		T	
17.750	+/-0.010	17.750	✓		T	
14.250	+/-0.010	14.250	✓		T	
9.500	+/-0.010	9.506	✓		T	
4.750	+/-0.010	4.750	✓		T	
0.300	+/-0.010	.307	✓		V	
0.300	+/-0.010	.304	✓		V	
0.038	+/-0.010	.034	✓		V	

Measured by:	HB	Audited by:	[illegible]	Prototype Approval:	N/A
Date:	10-8-19	Date:	10/08/19	Date:	N/A

Rev	Date	Change	Revised by	Approved
A	07.05.10	New Issue	KJ/JLM	[illegible]

Dart Aerospace Ltd

W/O:		WORK ORDER CHANGES					
DATE	STEP	PROCEDURE CHANGE	By	Date	Qty	Approval Chief Eng / Prod Mgr	Approval QC Inspector

Part No: _____ **PAR #:** _____ **Fault Category:** _____ **NCR:** Yes No **DQA:** _____ **Date:** _____

Resolution: _____ **Disposition:** _____ **QA: N/C Closed:** _____ **Date:** _____

NCR:		WORK ORDER NON-CONFORMANCE (NCR)						
DATE	STEP	Description of NC Section A	Corrective Action Section B			Verification Section C	Approval Chief Eng	Approval QC Inspector
			Initial Chief Eng	Action Description Chief Eng	Sign & Date			

NOTE: Date & initial all entries

H:\fFORMS\Quality Assurance\approved QA\NCRWO RevE

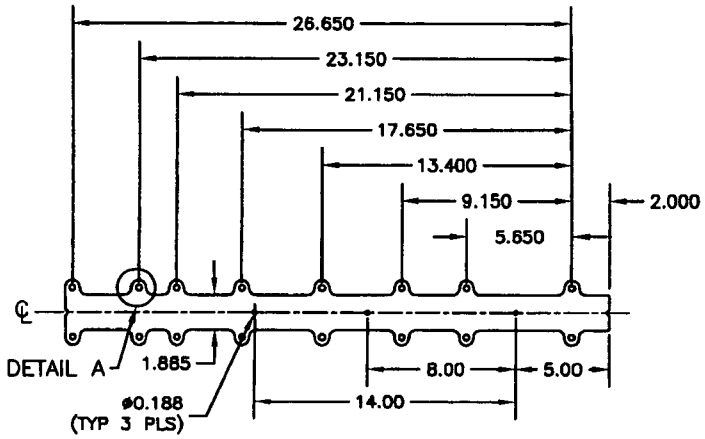

D3535-11F FLAT PATTERN

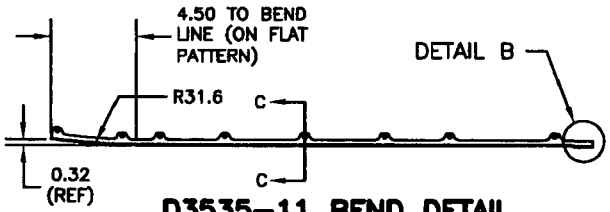

D3535-11 BEND DETAIL

SHOP COPY
RETURN TO
ENGINEERING
UNCONTROLLED COPY
SUBJECT TO AMENDMENT
WITHOUT NOTICE
WORK ORDER
NO. 60863
RS 10-7-20

RELEASED
07.04.24

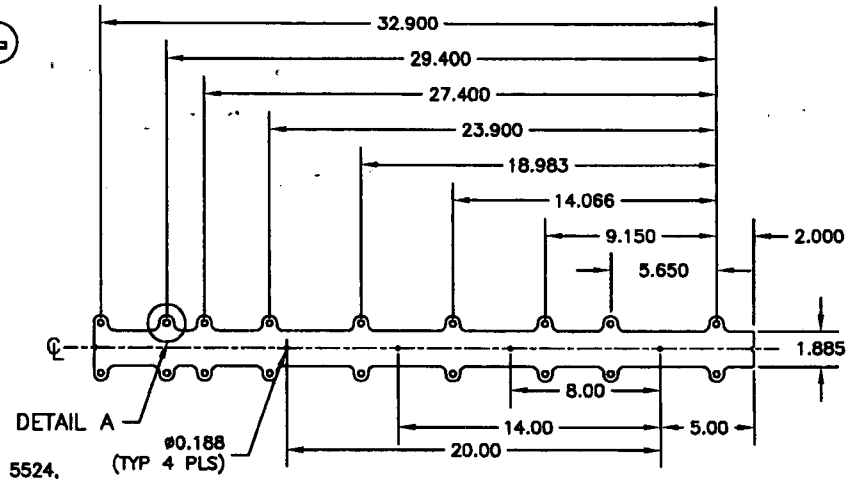

D3535-13F FLAT PATTERN

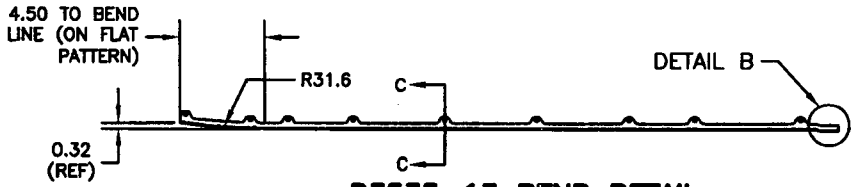

D3535-13 BEND DETAIL

NOTES

1) MATERIAL: AISI 304/316 SS SHEET PER AMS 5513 OR AMS 5524, 20 GAUGE (0.038 THICK) (REF DART SPEC M304S20GA)
2) FINISH: POWDER COAT GREY SANDTEX (4.3.5.6) PER QSI 005 4.3
3) PART IS SYMMETRICAL ABOUT ℄
4) TOLERANCES ARE PER DART QSI 018 UNLESS OTHERWISE NOTED
5) ALL DIMENSIONS ARE IN INCHES
6) BREAK ALL SHARP EDGES TO 0.010 MAX
7) IDENTIFY WITH DART P/N USING WHITE FINE POINT PAINT MARKER
8) SEE PAGE 7 FOR DETAILS AND SECTION

REV	DATE	DESCRIPTION
A	06.10.25	NEW ISSUE
B	07.04.17	MOVE TAB OUTBOARD, ADD AMS SPEC

DART

DESIGN: CB
DRAWN BY: AH
CHECKED
APPROVED
DATE: 07.04.17
DRAWING NO. D3535
TITLE: WEARSHOE
SCALE: 1:10
SHEET 1 OF 7
REV. B

DART AEROSPACE USA, INC.
PORT HADLOCK, WA

Dart Aerospace Ltd

W/O:		WORK ORDER CHANGES					
DATE	STEP	PROCEDURE CHANGE	By	Date	Qty	Approval Chief Eng / Prod Mgr	Approval QC Inspector

Part No: _____ **PAR #:** _____ **Fault Category:** _____ **NCR:** Yes No **DQA:** _____ **Date:** _____

Resolution: _____ **Disposition:** _____ **QA: N/C Closed:** _____ **Date:** _____

NCR:		WORK ORDER NON-CONFORMANCE (NCR)						
DATE	STEP	Description of NC Section A	Corrective Action Section B			Verification Section C	Approval Chief Eng	Approval QC Inspector
			Initial Chief Eng	Action Description Chief Eng	Sign & Date			

NOTE: Date & initial all entries

H:\FORMS\Quality Assurance\approved QA\NCRWO RevE

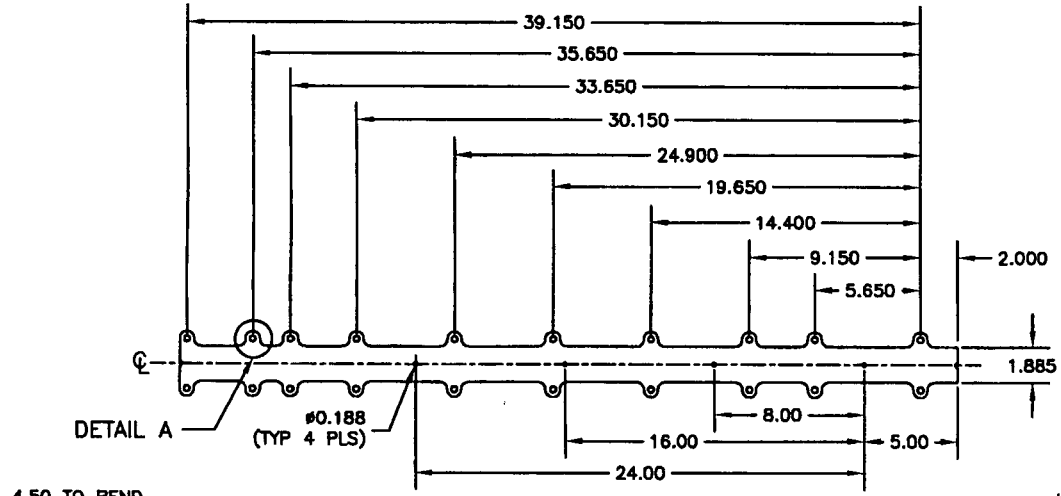

D3535-15F FLAT PATTERN

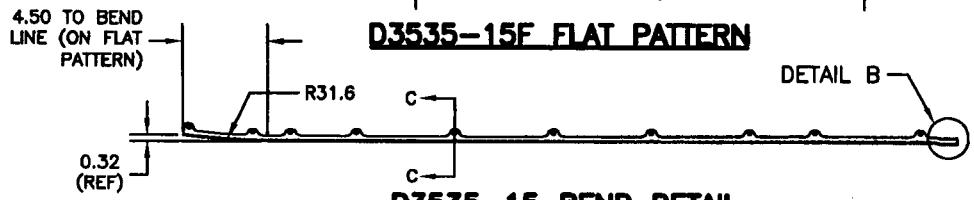

D3535-15 BEND DETAIL

RELEASED
07.04.24

wb 60866

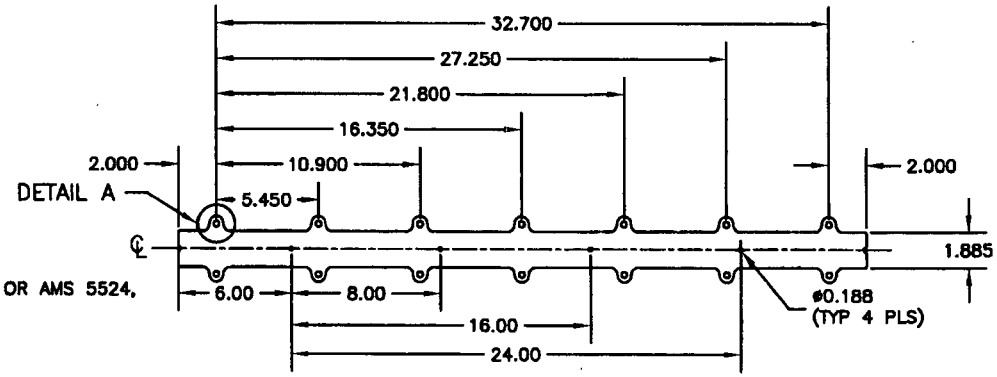

D3535-21F FLAT PATTERN

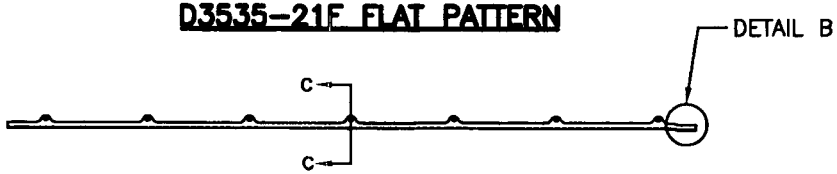

D3535-21 BEND DETAIL

NOTES

1) MATERIAL: AISI 304/316 SS SHEET PER AMS 5513 OR AMS 5524, 20 GAUGE (0.038 THICK) (REF DART SPEC M304S20GA)
2) FINISH: POWDER COAT GREY SANDTEX (4.3.5.6) PER QSI 005 4.3
3) PART IS SYMMETRICAL ABOUT ℄
4) TOLERANCES ARE PER DART QSI 018 UNLESS OTHERWISE NOTED
5) ALL DIMENSIONS ARE IN INCHES
6) BREAK ALL SHARP EDGES TO 0.010 MAX
7) IDENTIFY WITH DART P/N USING WHITE FINE POINT PAINT MARKER
8) SEE PAGE 7 FOR DETAILS AND SECTION

DART

DESIGN	DRAWN BY	DART AEROSPACE USA, INC. PORT HADLOCK, WA	
CB	PH		
CHECKED	APPROVED	DRAWING NO. D3535	REV. B
DATE 07.04.17		TITLE WEARSHOE	SHEET 2 OF 7
			SCALE 1:10

Dart Aerospace Ltd

W/O:		WORK ORDER CHANGES					
DATE	STEP	PROCEDURE CHANGE	By	Date	Qty	Approval Chief Eng / Prod Mgr	Approval QC Inspector

Part No: _____ **PAR #:** _____ **Fault Category:** _____ **NCR:** Yes No **DQA:** _____ **Date:** _____

Resolution: _____ **Disposition:** _____ **QA: N/C Closed:** _____ **Date:** _____

NCR:		WORK ORDER NON-CONFORMANCE (NCR)						
DATE	STEP	Description of NC Section A	Corrective Action Section B			Verification Section C	Approval Chief Eng	Approval QC Inspector
			Initial Chief Eng	Action Description Chief Eng	Sign & Date			

NOTE: Date & initial all entries

H:\fFORMS\Quality Assurance\approved QA\NCRWO RevE

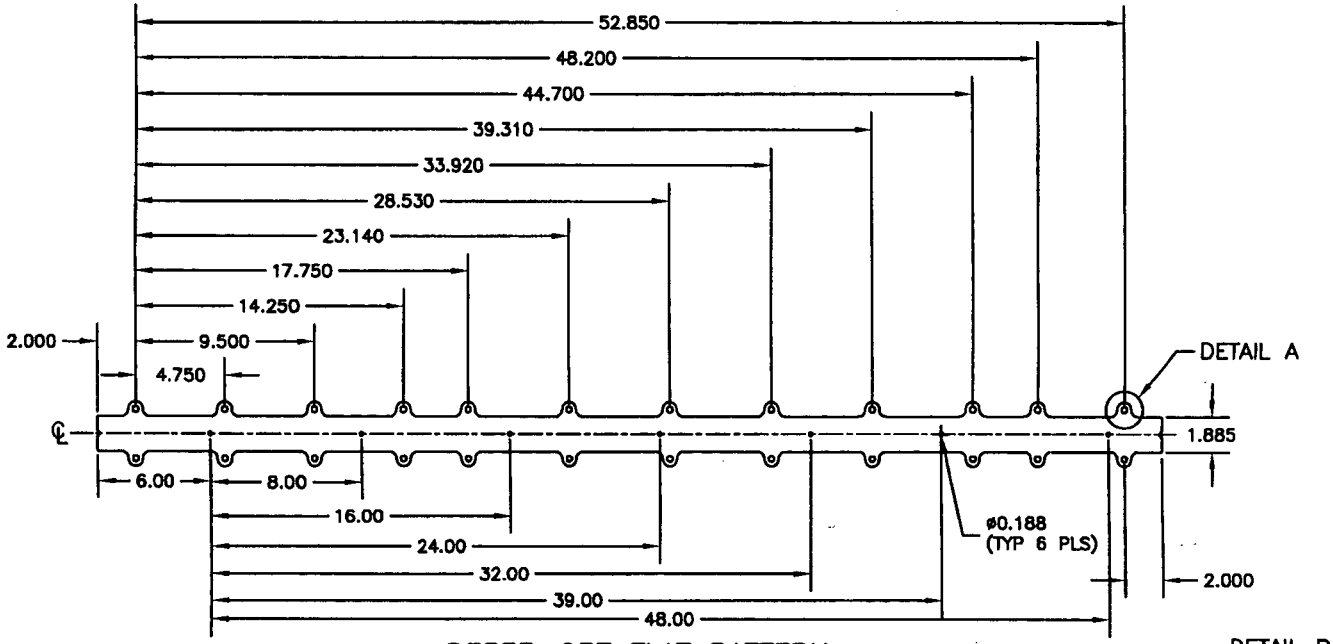

D3535-23F FLAT PATTERN

D3535-23 BEND DETAIL

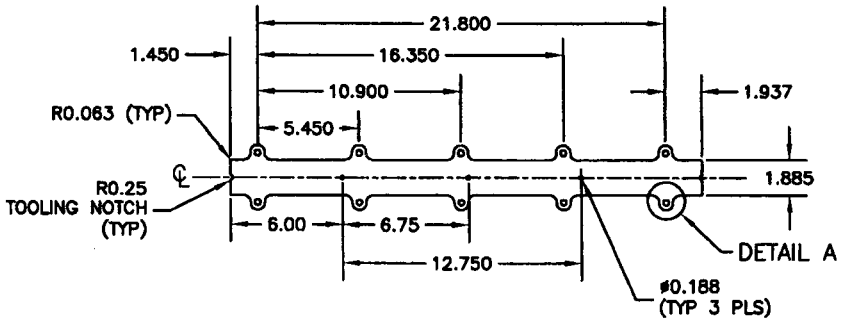

D3535-25F FLAT PATTERN

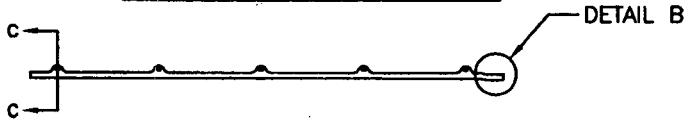

D3535-25 BEND DETAIL

NOTES

1) MATERIAL: AISI 304/316 SS SHEET PER AMS 5513 OR AMS 5524, 20 GAUGE (0.038 THICK) (REF DART SPEC M304S20GA)
2) FINISH: POWDER COAT GREY SANDTEX (4.3.5.6) PER QSI 005 4.3
3) PART IS SYMMETRICAL ABOUT ℄
4) TOLERANCES ARE PER DART QSI 018 UNLESS OTHERWISE NOTED
5) ALL DIMENSIONS ARE IN INCHES
6) BREAK ALL SHARP EDGES TO 0.010 MAX
7) IDENTIFY WITH DART P/N USING WHITE FINE POINT PAINT MARKER
8) SEE PAGE 7 FOR DETAILS AND SECTION

RELEASED 07.04.24

alu 60846

DART

DESIGN CB	DRAWN BY PH	DART AEROSPACE USA, INC. PORT HADLOCK, WA	
CHECKED	APPROVED	DRAWING NO. D3535	REV. B
DATE 07.04.17		TITLE WEARSHOE	SHEET 3 OF 7
			SCALE 1:10

Dart Aerospace Ltd

W/O:		WORK ORDER CHANGES					
DATE	STEP	PROCEDURE CHANGE	By	Date	Qty	Approval Chief Eng / Prod Mgr	Approval QC Inspector

Part No: _____ **PAR #:** _____ **Fault Category:** _____ **NCR:** Yes No **DQA:** _____ **Date:** _____

Resolution: _____ **Disposition:** _____ **QA: N/C Closed:** _____ **Date:** _____

NCR:		WORK ORDER NON-CONFORMANCE (NCR)						
DATE	STEP	Description of NC Section A	Corrective Action Section B			Verification Section C	Approval Chief Eng	Approval QC Inspector
			Initial Chief Eng	Action Description Chief Eng	Sign & Date			

NOTE: Date & initial all entries

H:\fFORMS\Quality Assurance\approved QA\NCRWO RevE

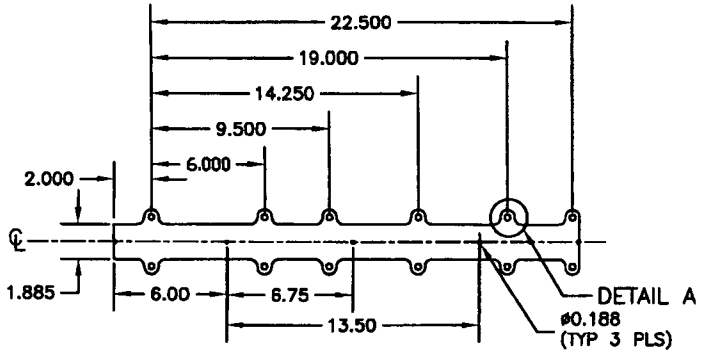

D3535-31F FLAT PATTERN

D3535-31 BEND DETAIL

RELEASED
07.04.24

w/o 40845

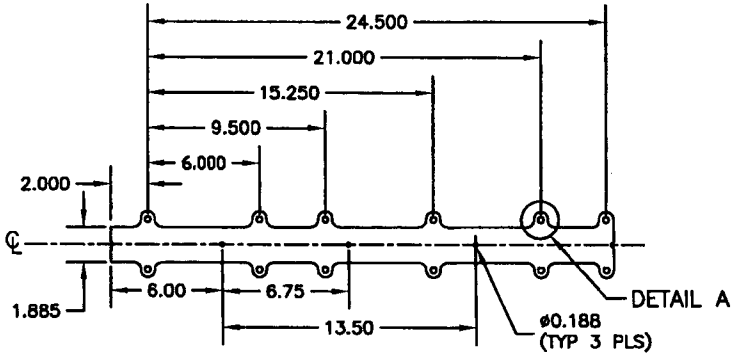

D3535-33F FLAT PATTERN

D3535-33 BEND DETAIL

NOTES

1) MATERIAL: AISI 304/316 SS SHEET PER AMS 5513 OR AMS 5524, 20 GAUGE (0.038 THICK) (REF DART SPEC M304S20GA)
2) FINISH: POWDER COAT GREY SANDTEX (4.3.5.6) PER QSI 005 4.3
3) PART IS SYMMETRICAL ABOUT ℄
4) TOLERANCES ARE PER DART QSI 018 UNLESS OTHERWISE NOTED
5) ALL DIMENSIONS ARE IN INCHES
6) BREAK ALL SHARP EDGES TO 0.010 MAX
7) IDENTIFY WITH DART P/N USING WHITE FINE POINT PAINT MARKER
8) SEE PAGE 7 FOR DETAILS AND SECTION

DART

DESIGN CB	DRAWN BY PH	DART AEROSPACE USA, INC. PORT HADLOCK, WA	
CHECKED	APPROVED	DRAWING NO. D3535	REV. B
DATE 07.04.17		TITLE WEARSHOE	SHEET 4 OF 7
			SCALE 1:10

Dart Aerospace Ltd

W/O:		WORK ORDER CHANGES					
DATE	STEP	PROCEDURE CHANGE	By	Date	Qty	Approval Chief Eng / Prod Mgr	Approval QC Inspector

Part No: _____ **PAR #:** _____ **Fault Category:** _____ **NCR:** Yes No **DQA:** _____ **Date:** _____

Resolution: _____ **Disposition:** _____ **QA: N/C Closed:** _____ **Date:** _____

NCR:		WORK ORDER NON-CONFORMANCE (NCR)						
DATE	STEP	Description of NC Section A	Corrective Action Section B			Verification Section C	Approval Chief Eng	Approval QC Inspector
			Initial Chief Eng	Action Description Chief Eng	Sign & Date			

NOTE: Date & initial all entries

H:\fFORMS\Quality Assurance\approved QA\NCRWO RevE

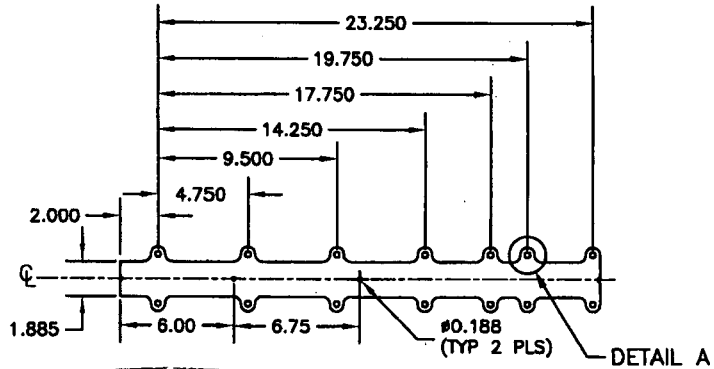

D3535-35F FLAT PATTERN

D3535-35 BEND DETAIL

RELEASED
07.04.24

u/o 608 65

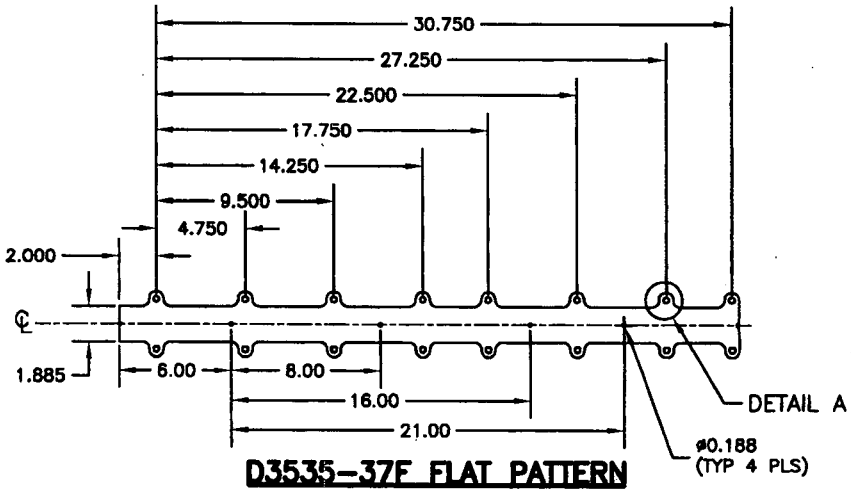

D3535-37F FLAT PATTERN

D3535-37 BEND DETAIL

NOTES

1) MATERIAL: AISI 304/316 SS SHEET PER AMS 5513 OR AMS 5524, 20 GAUGE (0.038 THICK) (REF DART SPEC M304S20GA)
2) FINISH: POWDER COAT GREY SANDTEX (4.3.5.6) PER QSI 005 4.3
3) PART IS SYMMETRICAL ABOUT ℄
4) TOLERANCES ARE PER DART QSI 018 UNLESS OTHERWISE NOTED
5) ALL DIMENSIONS ARE IN INCHES
6) BREAK ALL SHARP EDGES TO 0.010 MAX
7) IDENTIFY WITH DART P/N USING WHITE FINE POINT PAINT MARKER
8) SEE PAGE 7 FOR DETAILS AND SECTION

DART

DESIGN	DRAWN BY	DART AEROSPACE USA, INC. PORT HADLOCK, WA	
CB	PH		
CHECKED	APPROVED	DRAWING NO. D3535	REV. B
DATE 07.04.17		TITLE WEARSHOE	SHEET 5 OF 7
			SCALE 1:10

Dart Aerospace Ltd

W/O:		WORK ORDER CHANGES					
DATE	STEP	PROCEDURE CHANGE	By	Date	Qty	Approval Chief Eng / Prod Mgr	Approval QC Inspector

Part No: _____ **PAR #:** _____ **Fault Category:** _____ **NCR:** Yes No **DQA:** _____ **Date:** _____

Resolution: _____ **Disposition:** _____ **QA: N/C Closed:** _____ **Date:** _____

NCR:		WORK ORDER NON-CONFORMANCE (NCR)						
DATE	STEP	Description of NC Section A	Corrective Action Section B			Verification Section C	Approval Chief Eng	Approval QC Inspector
			Initial Chief Eng	Action Description Chief Eng	Sign & Date			

NOTE: Date & initial all entries

H:\fFORMS\Quality Assurance\approved QA\NCRWO RevE

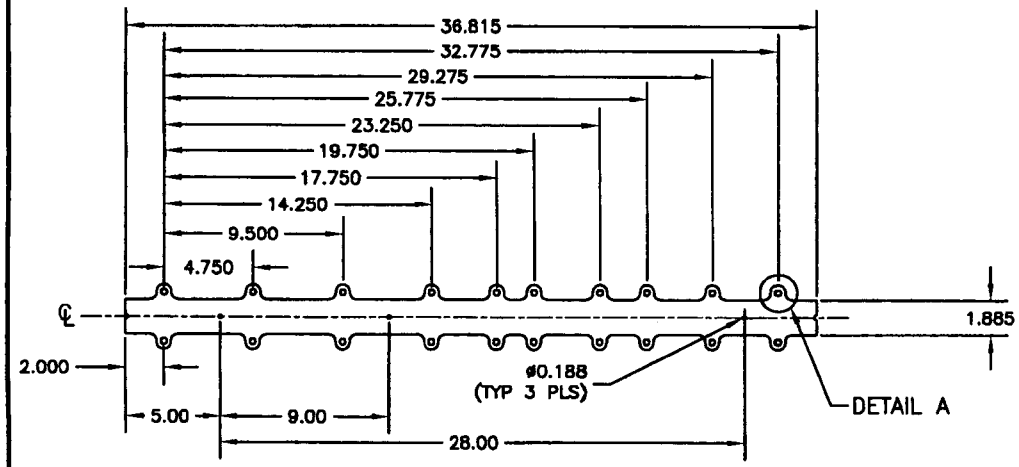

D3535-39F FLAT PATTERN

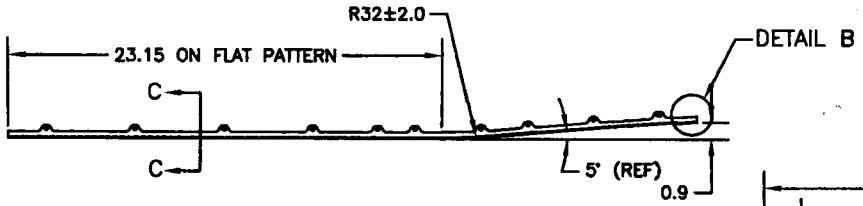

D3535-39 BEND DETAIL

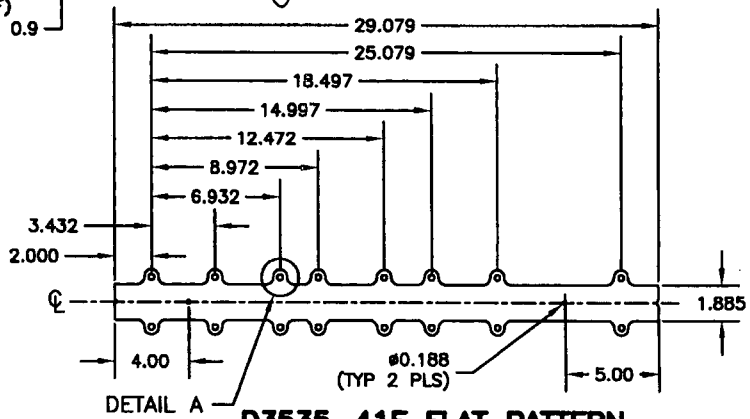

D3535-41F FLAT PATTERN

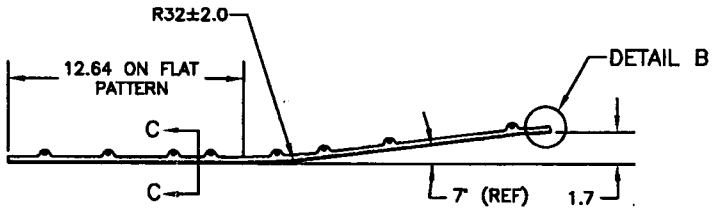

D3535-41 BEND DETAIL

NOTES

1) MATERIAL: AISI 304/316 SS SHEET PER AMS 5513 OR AMS 5524, 20 GAUGE (0.038 THICK) (REF DART SPEC M304S20GA)
2) FINISH: POWDER COAT GREY SANDTEX (4.3.5.6) PER QSI 005 4.3
3) PART IS SYMMETRICAL ABOUT ℄
4) TOLERANCES ARE PER DART QSI 018 UNLESS OTHERWISE NOTED
5) ALL DIMENSIONS ARE IN INCHES
6) BREAK ALL SHARP EDGES TO 0.010 MAX
7) IDENTIFY WITH DART P/N USING WHITE FINE POINT PAINT MARKER
8) SEE PAGE 7 FOR DETAILS AND SECTION

RELEASED 07.04.24

wld. 60865

DART

DESIGN CB	DRAWN BY	DART AEROSPACE USA, INC. PORT HADLOCK, WA
CHECKED	APPROVED	DRAWING NO. D3535 — REV. B
DATE 07.04.17		TITLE WEARSHOE — SHEET 6 OF 7 — SCALE 1:10

Dart Aerospace Ltd

W/O:		WORK ORDER CHANGES					
DATE	STEP	PROCEDURE CHANGE	By	Date	Qty	Approval Chief Eng / Prod Mgr	Approval QC Inspector

Part No: _____ **PAR #:** _____ **Fault Category:** _____ **NCR:** Yes No **DQA:** _____ **Date:** _____

Resolution: _____ **Disposition:** _____ **QA: N/C Closed:** _____ **Date:** _____

NCR:		WORK ORDER NON-CONFORMANCE (NCR)						
DATE	STEP	Description of NC Section A	Corrective Action Section B			Verification Section C	Approval Chief Eng	Approval QC Inspector
			Initial Chief Eng	Action Description Chief Eng	Sign & Date			

NOTE: Date & initial all entries

H:\fFORMS\Quality Assurance\approved QA\NCRWO RevE

DESIGN	DRAWN BY	DART AEROSPACE USA, INC. PORT HADLOCK, WA	
CB	PH		
CHECKED	APPROVED	DRAWING NO. D3535	REV. B SHEET 7 OF 7
DATE 07.04.17		TITLE WEARSHOE	SCALE 1:1

RELEASED
07.04.24

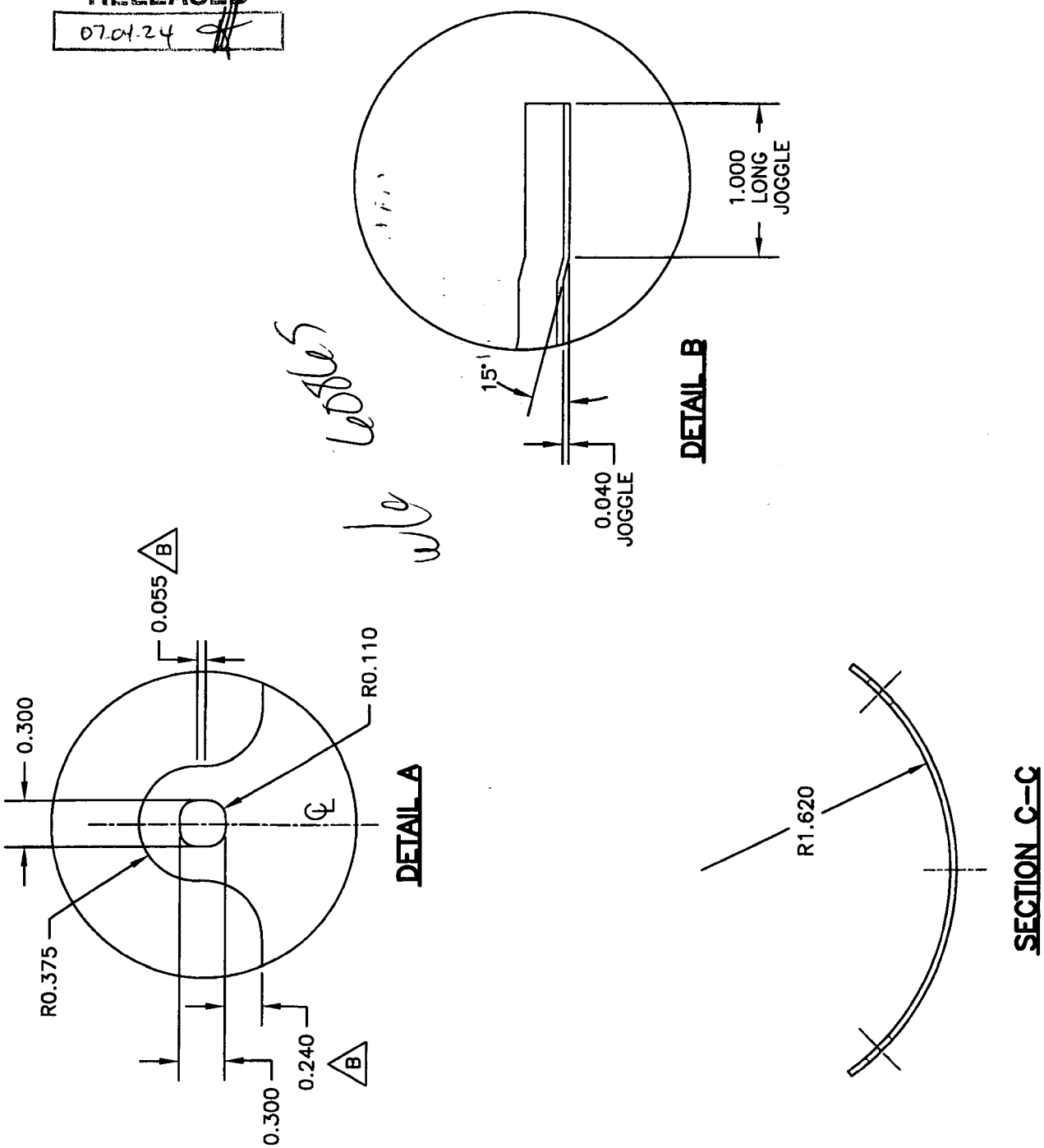

Dart Aerospace Ltd

W/O:		WORK ORDER CHANGES					
DATE	STEP	PROCEDURE CHANGE	By	Date	Qty	Approval Chief Eng / Prod Mgr	Approval QC Inspector

Part No: _____ PAR #: _____ Fault Category: _____ NCR: Yes No DQA: _____ Date: _____

Resolution: _____ Disposition: _____ QA: N/C Closed: _____ Date: _____

NCR:		WORK ORDER NON-CONFORMANCE (NCR)						
DATE	STEP	Description of NC Section A	Corrective Action Section B			Verification Section C	Approval Chief Eng	Approval QC Inspector
			Initial Chief Eng	Action Description Chief Eng	Sign & Date			

NOTE: Date & initial all entries

H:\fFORMS\Quality Assurance\approved QA\NCRWO RevE